SHIPPING BILL — BILL OF MATERIAL

SHIP MARK	PIECE MARK	QTY	DESCRIPTION	MATERIAL	LENGTH	REMARKS
6614		3	WALL_RAIL		1-	SHOP COAT PRIMER
	6614	3	PIPE1-1/4SCH40	A53-GR.B	14'-2 1/16"	
	by6601	18	BOI	A36	0'-2 1/2"	(BUYOUT)
	p6617	6	PL1/4"X1 5/8"	A36	0'-1 5/8"	
			FIELD BOLTS			
		54	HIT-HY 270 ADHESIVE AN**	HIT-HY 270 ADHES	0'-4 1/2"	

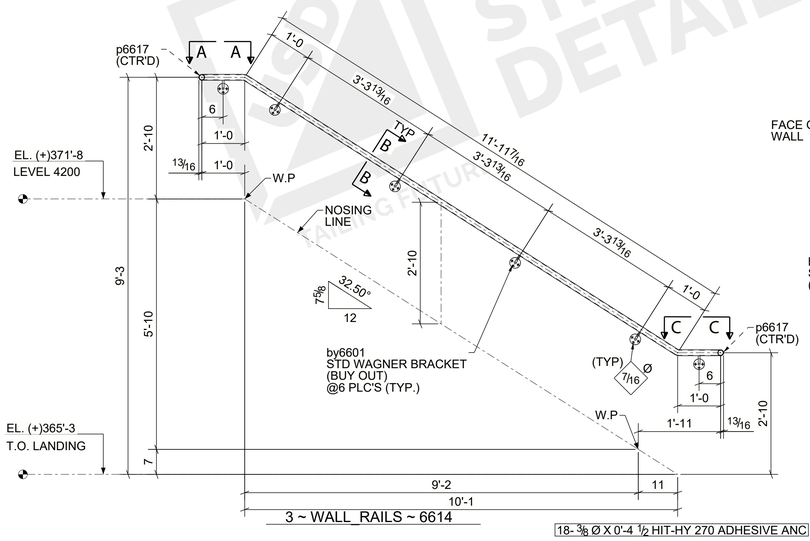

3 ~ WALL_RAILS ~ 6614

18- 3/8 Ø X 0'-4 1/2 HIT-HY 270 ADHESIVE ANC

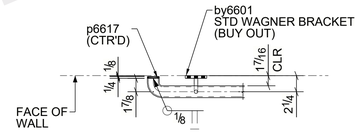

SECTION A - A

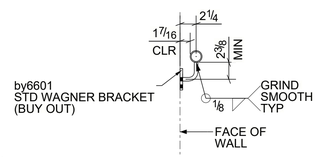

SECTION B - B

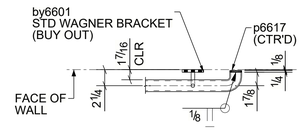

SECTION C - C

NOTES:-

1. ALL WELDS SHALL BE GRIND SMOOTH.
2. ALL SHARPE EDGES WILL BE GRIND SMOOTH.
3. ALL THE BENDS WILL BE ROUND SHAPED.
4. PROVIDE END PREPARATIONS AT RAIL JOINTS AS REQURIED.

3 ~ WALL_RAILS ~ 6614

STRUCTURAL AND MISC. STEEL SPECIFICATIONS:

STRUCTURAL STEEL: W-SHAPES	ASTM A992 GRADE 50, Fy = 50 KSI
MISC. BARS, PLATES, C's & L's:	ASTM A36, Fy = 36 KSI
STRUCTURAL TUBING:	ASTM A500 GRADE C, Fy = 50KSI
STRUCTURAL PIPE:	ASTM A53 GRADE B, Fy = 35KSI
ANCHOR RODS / BOLTS:	ASTM F1554, GRADE 36KSI

REV.	DATE	BY	DESCRIPTION

UNITED STRUCTURE DETAILING INC
DETAILING FUTURE

PRINT RECORD

NO.	FOR	DATE
	CHECK	
	APPROV.	
	SHOP	
	FIELD USE	
	RESUBMIT	

DETAILS OF:
FOR:
LOCATION:
CONTRACTOR:
DRAWN BY CHECKED BY
CLEAN ELECTRODES
PAINT PAINT MIL'S –
ERECTION REF. CONT NO. DWG. NO.

Tekla structures

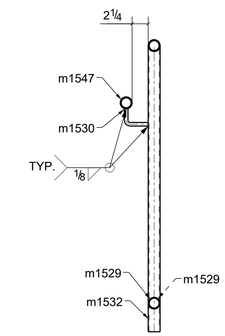

SECTION A - A

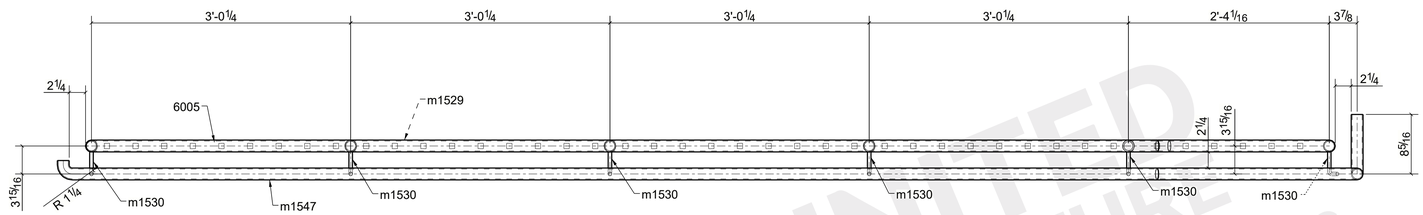

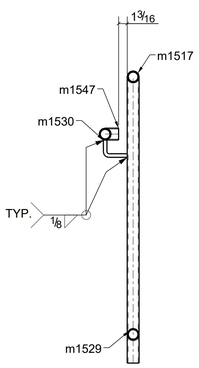

SECTION A - A

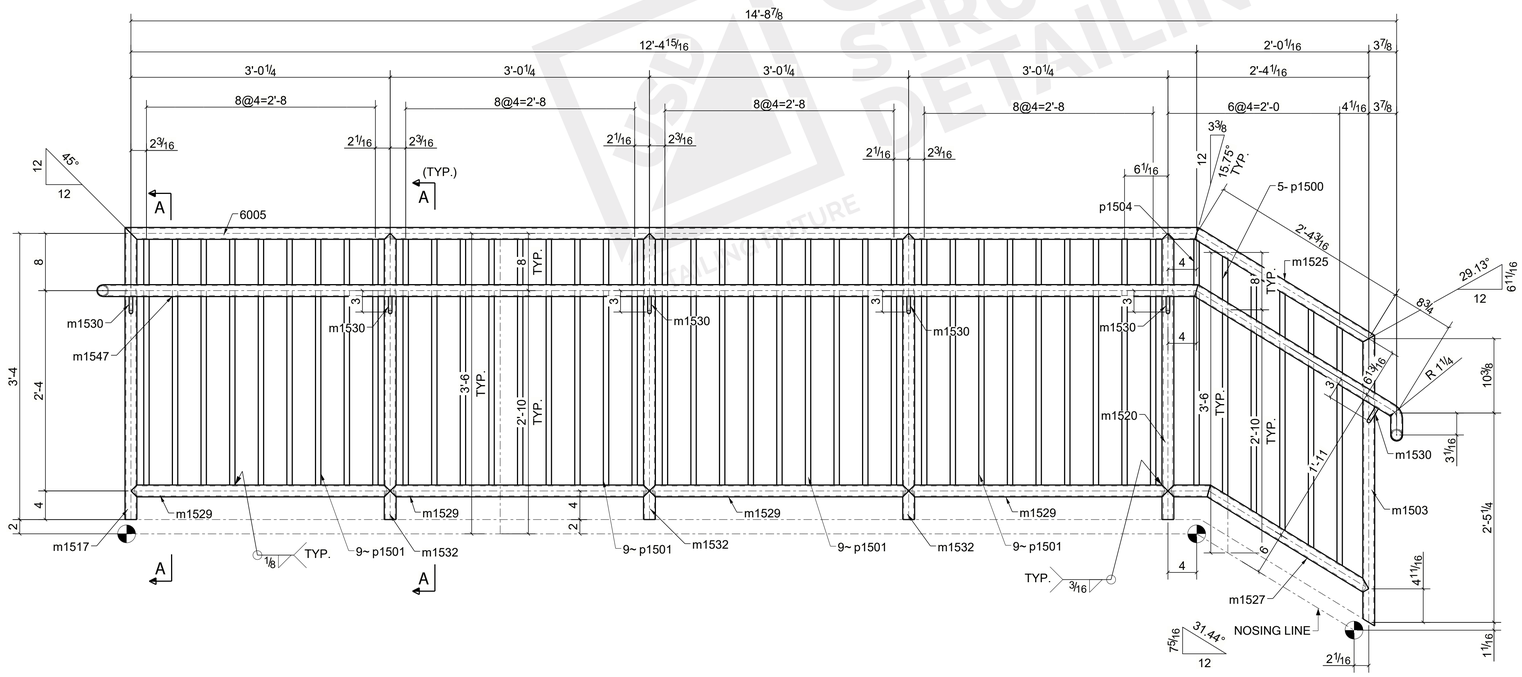

ONE ~ GUARDRAIL ~ 6005

(ONE@E208)

SHIPPING BILL — BILL OF MATERIAL

SHIP MARK	PIECE MARK	QTY	DESCRIPTION	MATERIAL	LENGTH	REMARKS
6005		1	GUARDRAIL			
		1	PIPE1-1/4SCH40	A53	62'-11 13/16"	TOTAL LENGTH
		1	PIPE1-1/4SCH80	A53	3'-4"	TOTAL LENGTH
	m1530	6	ROD1/2"	A36	0'-5 1/16"	
	p1500	5	PL3/4"X3/4"	A36	2'-9 1/2"	
	p1501	36	PL3/4"X3/4"	A36	2'-10 5/16"	
	p1504	1	PL3/4"X3/4"	A36	2'-10 5/16"	
			FIELD BOLTS			

STRUCTURAL AND MISC. STEEL SPECIFICATIONS:

STRUCTURAL STEEL: W-SHAPES	ASTM A992 GRADE 50, Fy = 50 KSI
MISC. BARS, PLATES, C's & L's:	ASTM A36, Fy = 36 KSI
STRUCTURAL TUBING:	ASTM A500 GRADE B, Fy = 46KSI
STRUCTURAL PIPE:	ASTM A53 GRADE B, Fy = 35KSI
ANCHOR RODS / BOLTS:	ASTM F1554, GRADE 36KSI

REV.	DATE	BY	DESCRIPTION

ALL HOLES UNLESS NOTED 13/16 Ø

ALL WELD UNLESS NOTED 3/16 TYP

UNITED STRUCTURE DETAILING INC

DETAILS OF: GUARDRAIL

FOR: HUNTERSVILLE TOWN CENTER

LOCATION: 245 BEACON TOWN DR HUNTERSVILLE, NC 28078

CONTRACTOR: Elford

DRAWN: BY: AMI CHECKED: 11/07/2022 BY: VIK

CLEAN: SSPC-SP2 ELECTRODES: E70XX

PAINT: STD.SHOP PAINT MIL's: 1.5 MILS

ERECTION REF.: (ONE@E208) CONT NO.: 22-2278 DWG. NO.: 6005

PRINT RECORD		
NO.	FOR	DATE
	CHECK	
	APPROV.	
	SHOP	
	FIELD USE	
	RESUBMIT	

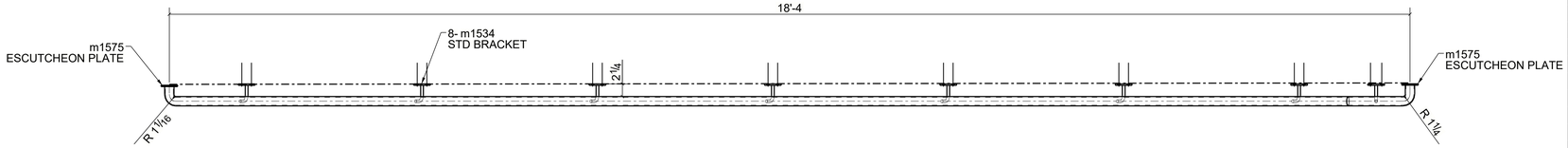

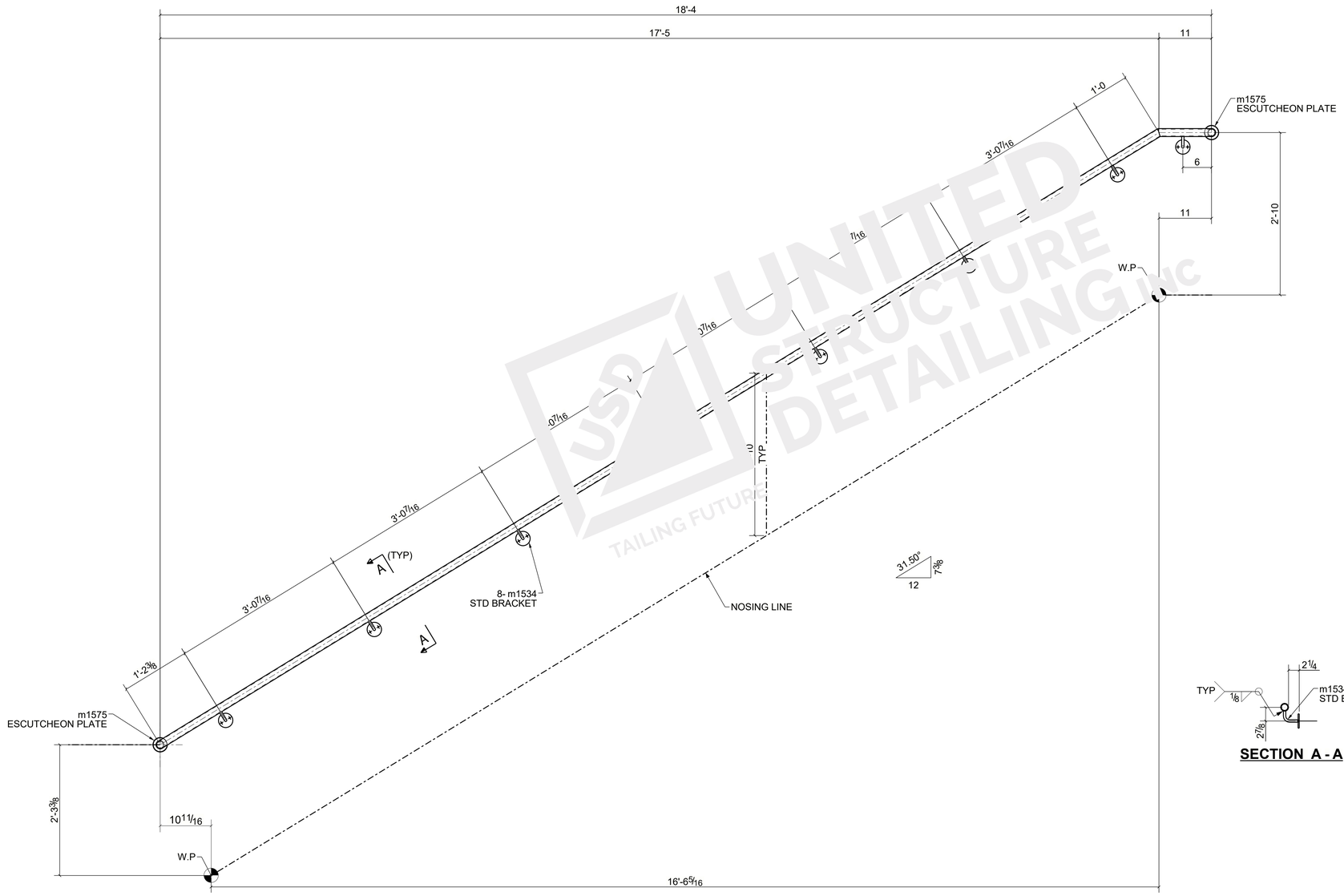

ONE ~ WALL RAIL ~ 6009

(2@E207)

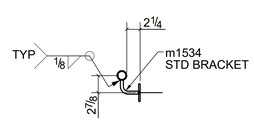

SECTION A - A

SHIPPING BILL

BILL OF MATERIAL

SHIP MARK	PIECE MARK	QTY	DESCRIPTION	MATERIAL	LENGTH	REMARKS
6009		1	WALL RAIL			
		1	PIPE1-1/4SCH40	A53	21'-9 7/16"	TOTAL LENGTH
	m1534	8	STD BRACKET	A36	0'-3 5/16"	(BUYOUT)
	m1575	2	ESCUTCHEON PLATE		0'-0 1/4"	
			FIELD BOLTS			

STRUCTURAL AND MISC. STEEL SPECIFICATIONS:

STRUCTURAL STEEL: W-SHAPES	ASTM A992 GRADE 50, Fy = 50 KSI
MISC. BARS, PLATES, C's & L's:	ASTM A36, Fy = 36 KSI
STRUCTURAL TUBING:	ASTM A500 GRADE B, Fy = 46KSI
STRUCTURAL PIPE:	ASTM A53 GRADE B, Fy = 35KSI
ANCHOR RODS / BOLTS:	ASTM F1554, GRADE 36KSI

REV.	DATE	BY	DESCRIPTION

ALL HOLES UNLESS NOTED 13/16 Ø

ALL WELD UNLESS NOTED 3/16 TYP

PRINT RECORD

NO.	FOR	DATE
	CHECK	
	APPROV.	
	SHOP	
	FIELD USE	
	RESUBMIT	

UNITED STRUCTURE DETAILING INC

DETAILS OF: HANDRAIL

FOR: HUNTERSVILLE TOWN CENTER

LOCATION: 245 BEACON TOWN DR HUNTERSVILLE, NC 28078

CONTRACTOR: Elford

DRAWN ____ BY AMI CHECKED 11/07/2022 BY VIK

CLEAN SSPC-SP2 ELECTRODES E70XX

PAINT STD.SHOP PAINT MIL's 1.5 MILS

ERECTION REF. 2@E207 CONT NO. 22-2278 DWG. NO. 6009

UNITED STRUCTURE DETAILING INC
TAILING FUTURE

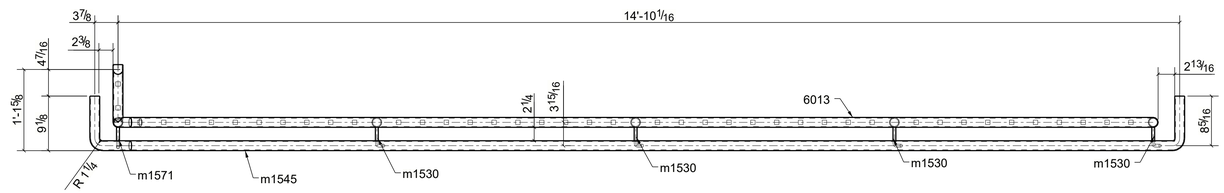

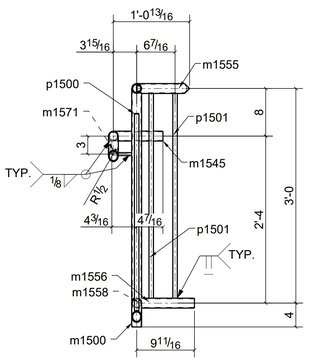

SECTION A - A

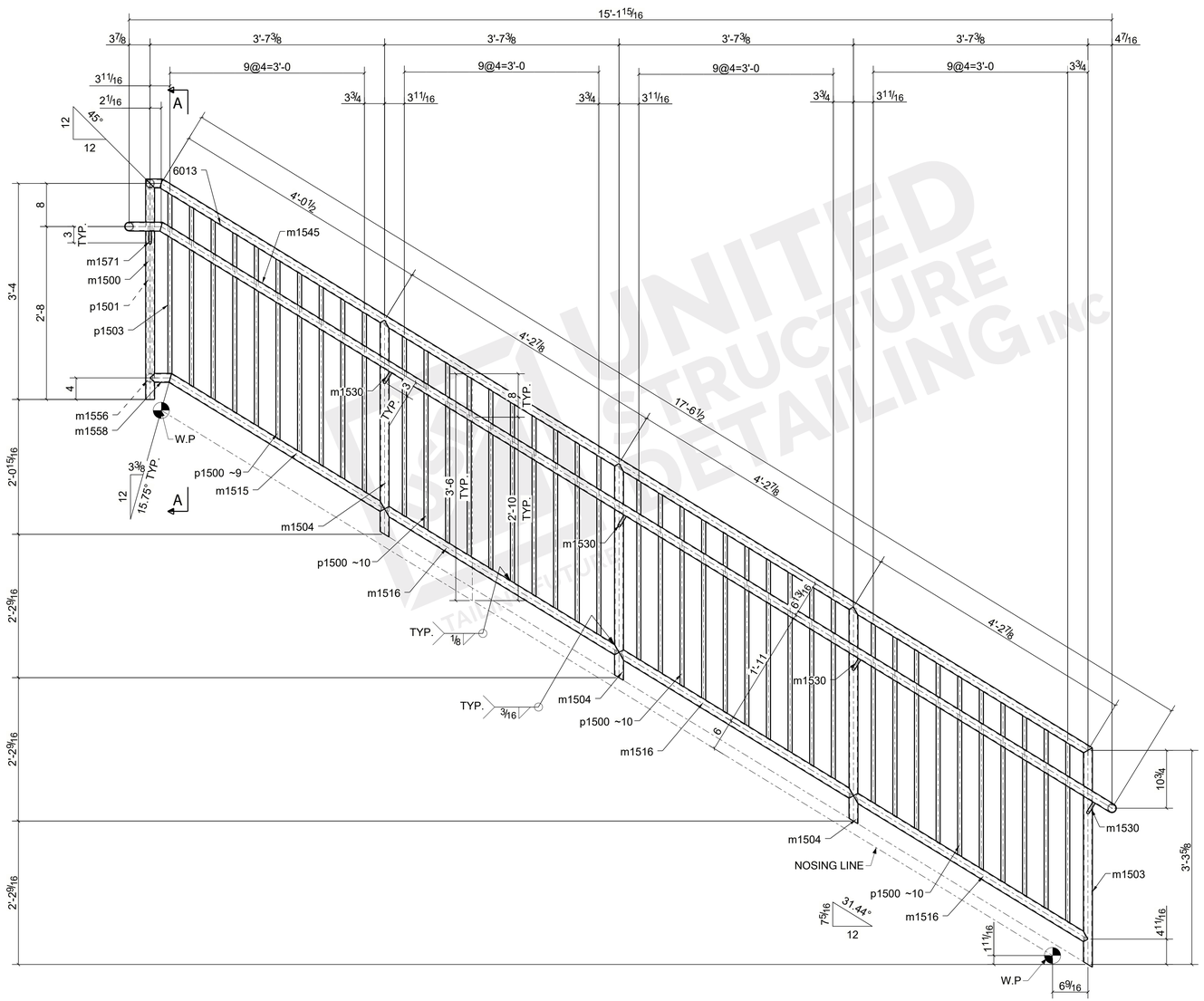

ONE ~ GUARDRAIL ~ 6013

(ONE@E207)

SHIPPING BILL

BILL OF MATERIAL

SHIP MARK	PIECE MARK	QTY	DESCRIPTION	MATERIAL	LENGTH	REMARKS
6013		1	GUARDRAIL			
		1	PIPE1-1/4SCH40	A53	71'-5 1/16"	TOTAL LENGTH
	m1530	4	ROD1/2"	A36	0'-5 1/16"	
	m1571	1	ROD1/2"	A36	0'-5 5/16"	
	p1500	39	PL3/4"X3/4"	A36	2'-9 1/2"	
	p1501	2	PL3/4"X3/4"	A36	2'-10 5/16"	
	p1503	1	PL3/4"X3/4"	A36	2'-9 7/16"	
			FIELD BOLTS			

STRUCTURAL AND MISC. STEEL SPECIFICATIONS:

STRUCTURAL STEEL: W-SHAPES	ASTM A992 GRADE 50, Fy = 50 KSI
MISC. BARS, PLATES, C's & L's:	ASTM A36, Fy = 36 KSI
STRUCTURAL TUBING:	ASTM A500 GRADE B, Fy = 46KSI
STRUCTURAL PIPE:	ASTM A53 GRADE B, Fy = 35KSI
ANCHOR RODS / BOLTS:	ASTM F1554, GRADE 36KSI

REV.	DATE	BY	DESCRIPTION

ALL HOLES UNLESS NOTED 13/16 Ø

ALL WELD UNLESS NOTED 3/16 TYP

UNITED STRUCTURE DETAILING INC

DETAILS OF: **GAURD RAIL**

FOR: HUNTERSVILLE TOWN CENTER

LOCATION: 245 BEACON TOWN DR HUNTERSVILLE, NC 28078

CONTRACTOR: Elford

DRAWN ____ BY ____ CHECKED ____ BY ____

CLEAN: SSPC-SP2 ELECTRODES: E70XX

PAINT: STD.SHOP PAINT MIL's: 1.5 MILS

ERECTION REF.: (ONE@E207)

CONT NO.: **22-2278** DWG. NO.: **6013**

PRINT RECORD

NO.	FOR	DATE
	CHECK	
	APPROV.	
	SHOP	
	FIELD USE	
	RESUBMIT	

UNITED STRUCTURE DETAILING INC