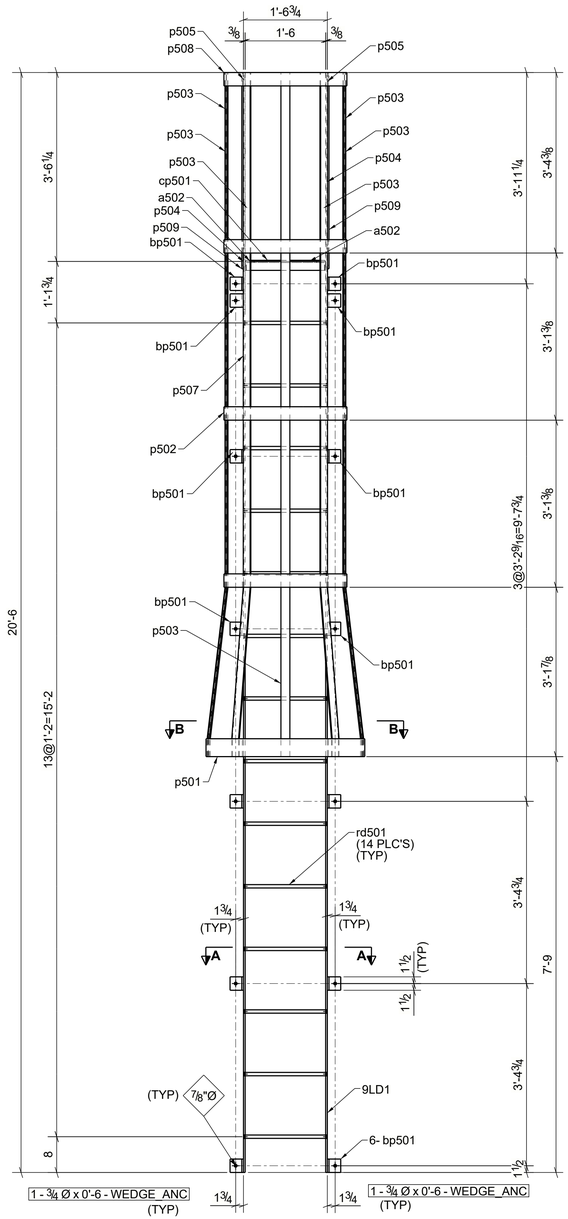

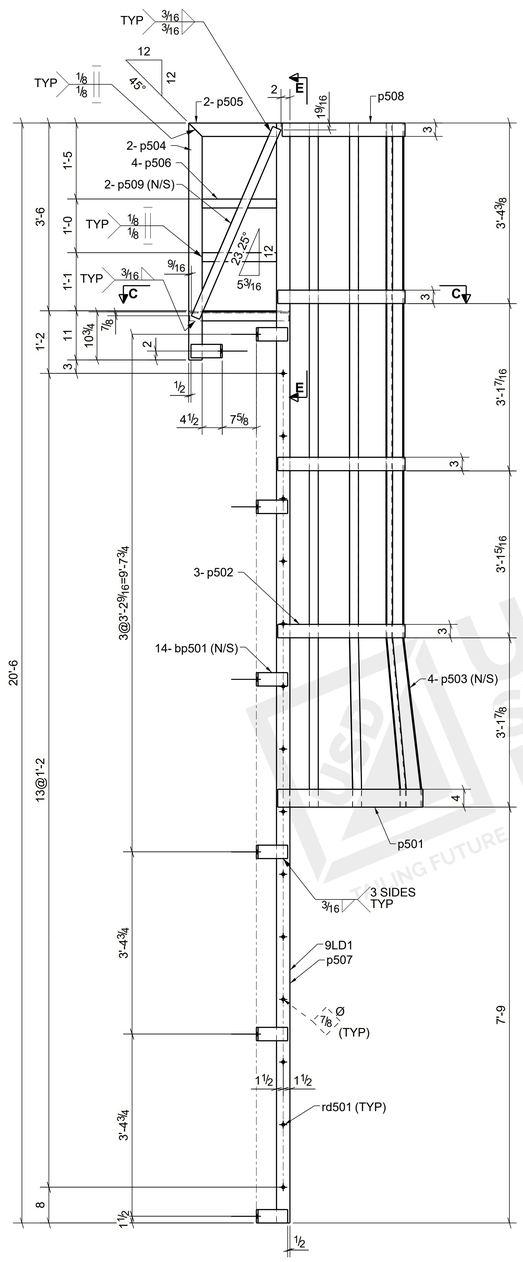

ONE ~ CAGED_LADDER ~ 9LD1
(ONE@E304)

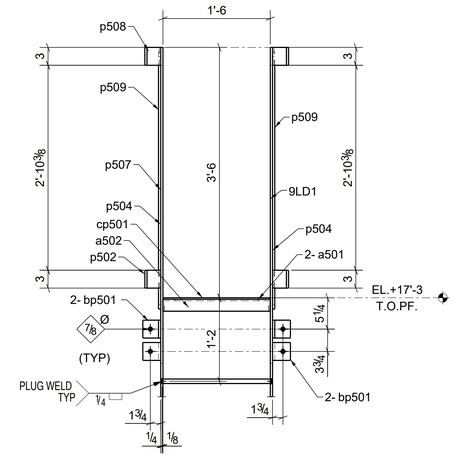

SECTION E - E

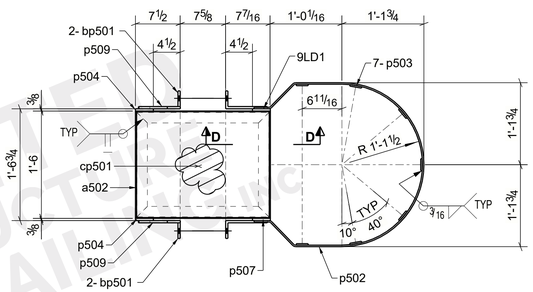

SECTION C - C

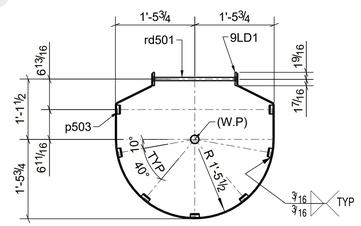

SECTION B - B

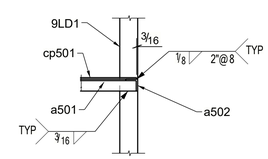

SECTION D - D

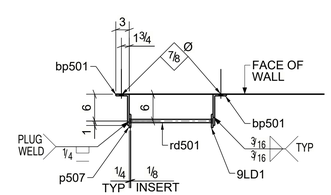

SECTION A - A

BILL OF MATERIAL

SHIP MARK	PIECE MARK	QTY	DESCRIPTION	MATERIAL	LENGTH	REMARKS
9LD1		1	CAGED_LADDER			
	9LD1	1	PL3/8"X3"	A36	20'-6"	
	a501	2	L2X2X1/4	A36	1'-10 5/8"	
	a502	2	L2X2X1/4	A36	1'-6"	
	bp501	14	PL3/8"X3"	A36	0'-9 1/4"	(BENT)
	cp501	1	CHKD_PLT1/4"X17 3/4"	A36	1'-10 1/4"	
	p501	1	PL1/4"X4"	A36	7'-10 9/16"	
	p502	3	PL1/4"X3"	A36	6'-3 11/16"	
	p503	7	PL1/4"X2"	A36	12'-9 3/16"	
	p504	2	PL3/8"X3"	A36	4'-5"	
	p505	2	PL3/8"X3"	A36	1'-7 5/8"	
	p506	4	PL3/8"X2"	A36	1'-4 5/8"	
	p507	1	PL3/8"X3"	A36	20'-6"	
	p508	1	PL1/4"X3"	A36	6'-1 11/16"	
	p509	2	PL3/8"X2"	A36	3'-10 1/8"	
	rd501	14	ROD3/4"	A36	1'-6 1/4"	
FIELD BOLTS						
		14	3/4" Ø WEDGE_ANC BOLTS		0'-6"	

REVISIONS

NO.	DATE	BY	DESCRIPTION
A	04/03/2023	AMP	For Approval

[X] FOR APPROVAL ONLY DO NOT FABRICATE [ ] FOR FABRICATION [ ] FOR FIELD

UNITED STRUCTURE DETAILING INC

STRUCTURE ADVANCE AUTO PARTS
LOCATION 1005 WEST FLAGLER STREET MAIMI, FL 33130
CUSTOMER STANSELL CONSTRUCTION
DETAIL OF CAGE LADDER

HOLES 13/16 UNLESS NOTED
PAINT STD SHOP PRIME
DRAWN BY NIT
CHECKED AMP
DATE: 03/27/2023
JOB NO. 3776
SHEET NO. 9